MGD - Murco Gas detector / Monitor

Installation & Operation*

Content Page

1-	Installation Instructions	2
2-	Location Instructions	3
3-	Typical Settings	3
4-	Operating Instructions	3
5-	Test/Function Instructions	4
6-	MGD Decorative Remote Sensor Installation	4
7-	Annual test	4
8-	Troubleshooting	4
9-	Installation and Wiring Diagrams	4
10-	Mounting diagrams	4

***Technician use only**

This unit must be installed by a suitably qualified technican who will install this unit in accordance with these instructions and the standards set down in their particular industry/country. Suitably qualified operators of the unit should be aware of the regulations and standards set down by their industry/country for the operation of this unit. These notes are only intended as a guide and the manufacturer bears no responsibility for the installation or operation of this unit.
Failure to install and operate the unit in accordance with these instructions and with industry guidelines may cause serious injury including death and the manufacturer will not be held responsible in this regard.

2010(ASH)

Murco Ltd.
114a Georges Street Lower, Dun Laoghaire Co Dublin. Ireland,
e-mail: info@murco.ie web: www.murcogasdetection.com

murco
gas detection solutions

1- MGD Installation Instructions

The main alarm unit and its sensor(s) should be positioned carefully to avoid mechanical damage (from moving machinery, doors, etc.) thermal extremes (close to heaters) and should not be placed unprotected in direct strong drafts/airflows and areas where water or moisture is present unless an appropriate enclosure is used.

Avoid routing sensor cabling outside of premises, or between buildings via overhead cables. Also, sensor wiring should be kept a minimum of 500mm from mains and telephone cables. (See section on sensor location)

When connecting the mains and / or sensor cables ensure a second mechanical fixing is used. Use a cable tie inside the enclosure within 25mm of the cable gland.

When power to the unit is switched on, there is a 3-minute delay before the system activates. This allows the sensors to warm up to the correct temperature for gas detection. On a two level unit, the green light on the alarm panel comes on after the delay, indicating that the system is ready. On a one level system the green light comes on immediately. When a unit has been off or stored for a long time the normalising period may be longer than 3 minutes. After the 3 minutes has expired alarms may activate. You may deactivate the siren until normalisation is complete. (Key switch on 2 level units, remove link on jumper JP1 in the case of a 1 level unit)

1.1 Remove the front cover. Mount the control unit using the mounting holes in the base such that the sensor cable terminal blocks are at the bottom of the unit in a convenient position (observing the above note).

1.2 Wiring to Remote Sensors:

Connect sensor cable (standard 4 wire alarm cable as specified below) to sensor terminal block CN1 on control unit positions 1,2,3 & 4. Route cable through the gland to remote sensor No.1.

Standard Sensors:
Remove lid of sensor. (To open the sensor enclosure : turn the cable gland ½ turn anticlockwise to loosen the internal nut, depress the clip on top of the enclosure and open). Connect the other end of the sensor cable to terminal block CN1 positions 1,2,3 & 4. Mount sensor box. Replace lid. Repeat above sequence for remaining sensors (depending on supplied system configuration.) Feed the cable through the bottom of the sensor enclosure.

Please ensure that connections 1 to 4 on the sensor connect to their corresponding numbers on the terminal block in the main alarm unit, otherwise the system will not function correctly.

Maximum Sensor Wiring Length: 230V Systems	
1 - 2 Channel Standard Units:	40 Metres 7/0.2mm Alarm Cable (Max. 3.52 Ohms / Core)
4 - 6 Channel Standard Units:	100 Metres 7/0.2mm Alarm Cable (Max. 8.8 Ohms / Core)

Maximum Sensor Wiring Length: 120V Systems	
1 - 2 Channel Units:	60.9M (200 feet) 22 gauge, stranded 4 wire Alarm Cable (Max 3.52 Ohms/Wire)
4 - 6 Channel Units:	152.25 Metres (500 feet) 22 gauge, stranded 4 wire Alarm Cable (Max 8.8 Ohms/Wire)

You may use different cables and longer distances once the ohmic resistance shown is not exceeded.

1.3 External Sounder and uncommitted 12 Volt DC output.
(Applies to 4 - 6 Channel systems only)

12 volt DC Sounder (12V /150MA max) - connect positive lead to CN9/CN11 (1L/2L models) terminal marked +12V, negative to centre terminal marked 'BUZZ'.

For uncommitted 12 V DC @100mA output is obtained via CN9/CN11 Terminals '+12V' and '0V' This output may be wired via the volt free relays to obtain a switching 12 volt DC output to drive an external relay or solenoid as follows:

If both the buzzer and 12V DC output are corrected correctly they should not exceed, 250MA in total.

Connect Terminal '+12V' on CN9/CN11 to the 'COM' terminal of the volt free relay, and the device to be switched to either the N/O or N/C Terminals of the volt free relay, depending on whether a 12 Volt output is required during an alarm condition or while the system is on standby. The return from the device is connected to OV on CN9/CN11

1.4. Voltage Free Relays.

10A @ 120/230 VAC

	Two Level Unit:	**One Level Unit:**
1 & 2 Channel Systems:	CN5: Low Level Alarm	CN4
	CN4: High Level Alarm	
4 - 6 Channel Systems:	CN10: Low Level Alarm	CN10
	CN9: High Level Alarm	
	CN12: Fault Reporting Relays	

Notes: *N/O and N/C refer to contact status in standby mode.*
On a two level system, A high level alarm condition on any sensor will override a low level alarm condition on another sensor.

On 4 - 6 Channel two level units, the high level relay may be set for normal or Fail-Safe operation by setting jumper JP1 on the control unit printed circuit board (Refer to Installation diagram)

Connect leads to terminal block for Common (COM) and N/O and/or N/C connections as required.

1.5. Mains Connection.

Connect mains supply (using 3-core 0.75 mm, Mains Flex for 230V systems or 3 wire, 18 gauge 0.823mm sq mains flex for 120V Systems) to terminal block CN3 (on 1 & 2 channel systems), or fused terminal block mounted on base of control unit (4 - 6 channel systems), Connections L, N and E. Ensure that earth connections to the lid and base of the enclosure are maintained.

NOTE: *Connection to mains supply must be via an approved readily accessible, switched and fused (2 or 5 Amp Fuse) plug and socket or as per local wiring regulations which should be within 3 meters (10 feet) of the control unit.*
- *The mains cable used should be of an approved type HAR or Cenelec approved or locally approved equivalent.*
- *If replacement of the mains fuse is required use only the appropriate type from the table below*

Control Unit Type: 230V Systems	**Fuse Rating Main Supply**	**Sensor Connection Fuse:**	**Siren / Auxiallry**
1 - 2 Channel Unit:	20mm T50mA	Not Applicable	Not Applicable
	230V Fuse		
4 - 6 Channel Unit:	20mm T160mA	20mm T250 mA	20mm T315 mA
	230V Fuse	230V Fuse	230V Fuse

Control Unit Type: 120V Systems	**Fuse Rating Main Supply**	**Sensor Connection Fuse:**	**Siren / Auxiallry**
1 - 2 Channel Unit:	20mm T100mA	Not Applicable	Not Applicable
	120V Fuse		
4 - 6 Channel Unit:	20mm T315mA	20mm T250 mA	20mm T315 mA
	230V Fuse	120V Fuse	230V Fuse

- The blanking plugs for cable entries should only be removed if being replaced by cable glands
- Ensure that the live and neutral conductors take the strain before the earth conductor.

2. MGD - Location Instructions

Location of Sensors
Sensors must be located within the appropriate wire lengths from the central control unit.

In all cases the sensor supplied is designed for maximum sensitivity to a particular gas.

However, in certain circumstances false alarms may be caused by the occasional presence of sufficiently high concentrations of other gaseous impurities. If such a situation is likely to arise installers should check with our Technical Department so that sensor (s) of suitable cross sensitivity can be supplied. Examples of situations where such abnormalities may arise include.

- Plant room maintenance activity involving solvent or paint fumes or refrigerant leaks.

- Plant rooms in fruit ripening/storage facilities because of accidental gas migration (bananas - ethylene, apples - carbon dioxide)
- Heavy localised exhaust fumes (carbon monoxide, dioxide, propane) from engine driven forklifts in confined spaces or close to sensors.

A response delay is built in to the system to minimise the possibilities of false alarms. (Two level units) or may be selected (one level units).

Machinery rooms
There is NO ABSOLUTE RULE in determining the number of sensors and their location. However a number of simple guidelines will help to make a decision. Sensors monitor a point as opposed to an area. If the gas leak does not reach the sensor then no alarm will be raised. Therefore, it is extremely important to carefully select the sensor location. Also consider ease of access for maintenance.

The size and nature of the site will help to decide which method is the most appropriate to use. Locations requiring the most protection in a machinery or plant room would be around compressors, pressurised storage vessels, refrigerant cylinders or storage rooms or pipelines. Most vulnerable are valves, gauges, flanges, joints (brazed or mechanical), filling or draining connections etc

When mechanical or natural ventilation is present mount a sensor in the airflow. In machinery rooms where there is no discernable or strong airflow then options are:

- Point Detection, where sensors are located as near as possible to the most likely sources of leakage, such as the compressor, expansion valves, mechanical joints or cable duct trenches.
- Perimeter Detection, where sensors completely surround the area or equipment.
- With heavier than air gases such as halocarbon and hydrocarbon refrigerants such as R404A, propane, and butane sensors should be located near ground level
- With lighter than air gas e.g. ammonia, the sensor needs to be located above the equipment to be monitored e.g. on a bracket or high on a wall within 300 mm of, or on the ceiling provided there is no possibility of a thermal layer trapped under the ceiling preventing gas reaching the sensor. (NB. At very low temperatures, such as in a refrigerated cold store, ammonia gas becomes heavier than air).
- With similar density or miscible gases, such as CO or CO2, sensors should be mounted about head high – say 1.5m.
- Sensors should be positioned a little way back from any high-pressure parts to allow gas clouds to form. Otherwise any leakage of gas is likely to pass by in a high-speed jet and not be detected by the sensor.
- Make sure that pits, stairwells and trenches are monitored since they may fill with stagnant pockets of gas.
- If a pressure relief vent pipe is fitted to the system, it may be a requirement to mount a sensor to monitor this vent pipe. It should be positioned about 2 m above the PRV to allow gas clouds to form.
- With racks or chillers pre-fitted with refrigerant sensors, these should be mounted so as to monitor the compressors or if extract ducts are fitted the airflow in the duct may be monitored.

Refrigerated Spaces
In refrigerated spaces sensors should be located in the return airflow to the evaporators on a sidewall, below head high preferred, or on the ceiling, **not** directly in front of an evaporator. In large rooms with multiple evaporators, sensors should be mounted on the central line between 2 adjacent evaporators, as turbulence will result in airflows mixing.

Chillers
In the case or small water or air-cooled enclosed chiller units mount the sensor so as to monitor airflow to the extract fans. With larger models also place a sensor inside the enclosure under or adjacent to the compressors

In the case of outdoor units:

- such as enclosed air-cooled chillers or the outdoor unit for VRV/VRF systems mount the sensor so as to monitor airflow to the extract fan. With large units also place a sensor inside the enclosure under or adjacent to the compressors

In the case of non-enclosed outdoor units

- If there is an enclosed machinery section then locate a sensor there.
- In the case of units with enclosed compressors, mount sensors in the enclosures
- Where you have protective or acoustic panels mount the sensor low down under the compressors where it is protected by the panels.
- With air-cooled chillers or air-cooled condensers with non-enclosed condenser sections it is difficult to effectively monitor leaks in the coil sections. With some designs it will be possible using an airflow sensor to monitor airflow to the start –up fans in the front or rear sections.
- If there is a possibility of refrigerant leaks into a duct or air-handling unit install a sensor to monitor the airflow.

Weatherproof sensors should be used for unprotected outdoor applications.

Air Conditioning – Direct systems VRV/VRF
EN378 states that at least one detector shall be installed in each occupied space being considered and the location of detectors shall be chosen in relation to the refrigerant and they shall be located where the refrigerant from the leak will collect. In this case refrigerants are heavier than air and detectors should have their sensors mounted low .e.g. at less than bed height in the case of an hotel or other similar Category Class A spaces. Ceiling or other voids if not sealed are part of the occupied space.

In a hotel room monitoring in ceiling voids would not strictly comply with EN378

Do's
- mount the in-room sensor at less than the normal heights of the occupants e.g in a hotel room this is less than bed height - between 200-500mm off the floor.
- away from draughts and heat sources like radiators etc.
- avoid sources of steam

Don'ts
- Do not mount sensors
  - under mirrors
  - at vanity units
  - in or near bathrooms

For further detailed Installation tips covering most installations and equipment types.. chillers, air cooled chillers etc see our web site www.murco.ie.

Perhaps the most important point of all is not to try and economise by using the minimum number of sensors possible. A few extra sensors could make all the difference if a gas leak occurs!

3- MGD - Typical settings

Gas: Refrigerant R404A **Low Alarm Set Point:** 100ppm
High Alarm set Point: 1000 ppm

For a particular unit please refer to the gas settings shown on the rating plate.

4- MGD- Operating Instructions

The Murco Gas Monitor having been installed in accordance with the installation instructions is ready to monitor the chosen air space and detect gas leaks at the pre-set level.

Each of the sensors has a green light to indicate that power is present.

To minimise false alarms, the system has a built in delay, between the arrival of gas at the sensor unit, and an alarm occurring. For one level units this delay is approximately 3 minutes. For two level units, this delay is 20-25 seconds before a low level alarm, and 25-30 seconds on a high level alarm. This delay can be deactivated in a one level unit by moving the link at position JP1 to the off position. (See technical installation drawing)

Unit Operation

Idle: Only the green light on the panel is on. No gas is present.

If the green light is off, power to the unit has been interrupted. Refer to the troubleshooting guide.

Alarm Condition

One Level System:
One or more red lights on the panel turn on. The siren and the volt free relays operate. This indicates that gas at one or more sensors is at a level higher than the preset alarm point.

Two Level Systems:
Low Alarm: One of more yellow lights on the panel turn on. The sounder operates intermittently, and the low alarm volt free relay operates: this indicates presence of a low level of gas on one or more sensors.

High Alarm: One or more Red Lights on the panel turn on. The sounder operates continuously, and the High alarm volt free relay operates: this indicates presence of a High level of gas on one or more of the sensors.

For the purpose of system maintenance, the siren may be disabled temporarily, on two level units, by using the key-switch. On one level units this is achieved by setting a jumper JP1 on the control unit printed circuit board. The location of this is shown on the Installation Drawing (Separate drawings for 1 - 2 and 4 - 6 channel units). Remove the link to disable the alarm

Resetting An Alarm Condition:
On one level units all of which have automatic reset no user intervention is required. The unit will reset shortly after the gas dissipates. (All one level systems reset automatically)

On two level units, low-level alarm conditions will reset automatically when the gas dissipates. High level alarm conditions require a manual reset (By pressing the reset button) Please note that a high alarm condition can only be reset 30-60 seconds after the gas clears from around the sensors.

5- MGD – Test / Function Instructions

The MGD is calibrated in the factory and does not require to be calibrated on installation. After installation the units should be bump tested. Expose the sensors to test gas using a Murco ampoule (NH3 or CO2 etc) or test cylinder (appropriate to the installation) or if not available, crack open the valve of a cigarette lighter (only for Semiconductor units) without igniting it and hold it over the vent holes on the upper right side of the sensor. The gas is heavier than air and should fall into the sensor. This will put the system into alarm. The red LED will light showing the system is in alarm. The delay will prevent the siren sounding or relay switching for the preset delay, if delay is set.

With a bump test you can see the functions of the sensor - the yellow/red led will light, the relay and sounder will function.

To test the siren and or relay function, check the delay is set at zero using the header as shown on the installation diagram and expose to gas as above.

After the gas has cleared, the red led, siren and relay will automatically reset on 1L Units with 2L press the reset button.

Before testing the sensors on site the MGD must have been powered up and allowed to stabilize.

6- MGD Sensor - Decorative remote sensor head installation
If you do not wish to surface mount the MGD Sensor or need to match room decor, we can supply a decorative faceplate (standard: brushed stainless steel to fit a 44mm double gang back box in which you can mount the sensor PCB. (UK and Ireland).

1. If construction / decoration is still going on, fit a standard plastic blanking plate immediately you install the sensor in the back box to avoid dust or damage to the in-room sensor. You can fit the SS vented plate when decoration is completed.

2. **Cleaning: the decorative face plate should be lightly dusted – it should not be sprayed with cleaning/polishing aerosols.**

7- MGD Sensor - Annual Test

To comply with the requirements of EN378 and the F GAS regulation sensors must be tested annually. However local regulations may specify the nature and frequency of this test. If not the Murco recommended procedure should be followed. Contact us for details.

Check local regulations on calibration or testing requirements.

After exposure to a substantial gas leak, sensor should be checked and replaced if necessary.

8 - MGD –Troubleshooting

Alarm Panel:
Symptom: No lights displayed on panel.

Cause:
1. Power failure (check supply)
2. Tripped circuit breaker or blown fuse on electrical supply
2. Blown fuse at the electrical supply on the controller PCB board.
3. Two Level unit only: Has unit warmed up? (This takes 3-4 minutes after power is switched on.)

Symptom: Red Light is on, but no alarm condition is active. i.e No siren and no relay operation after 3 minutes.

Cause:
1. Make sure the siren has not been deactivated (Key switch on 2 level controllers or link on jumper JP1 on 1 level controllers removed)

2. This indicates a wiring or sensor fault (call service provider). If these are in order the calibration pot may have been adjusted and may need to be reset. Check with us for instructions.

Sensor:
Symptom: Green light on sensor is off.

Cause: This may indicate a wiring fault between the controller and sensor or a sensor fault. Check power supply to the controller. Check connections between the controller and the sensor to ensure that the wires from positions 1 to 4 on the sensor are connected to the corresponding 1-4 on the controller. (See "Wiring Remote Sensors).

On a 4 to 6 channel unit check that the sensor fuse on the particular sensor connection position in the controller is not blown.

If the fault is not cleared then the sensor has been damaged.

If you experience spurious alarms in the absence of a leak, contact us for instructions and support.

9- Installation Diagrams

1, 2 Sensor 1 Level Installation Diagram

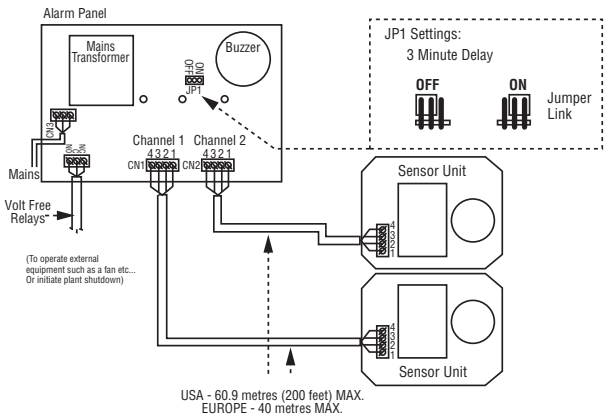

1, 2 Sensor 2 Level Installation Diagram

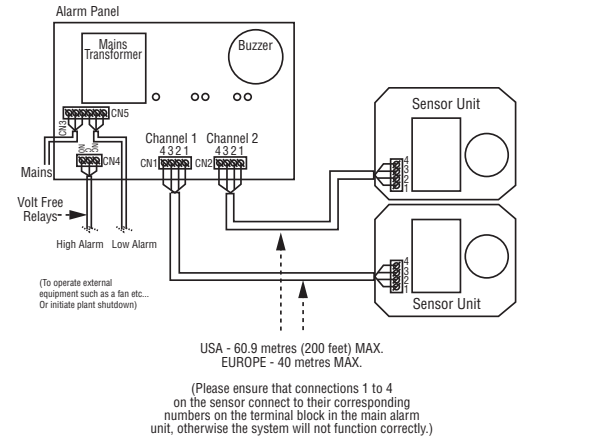

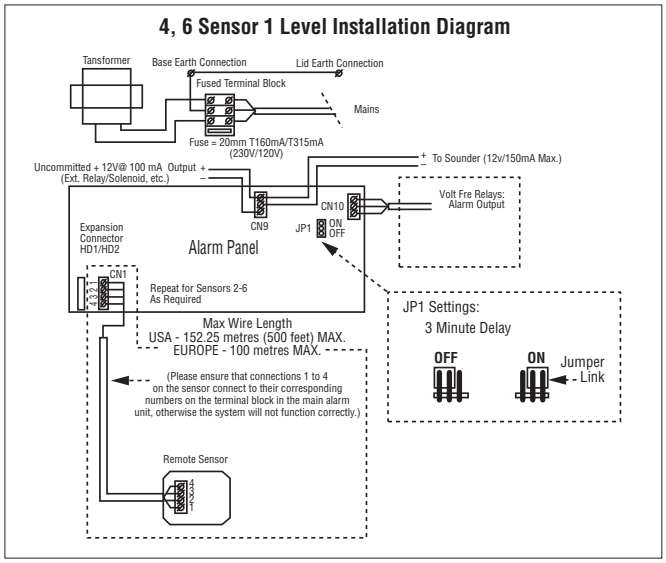

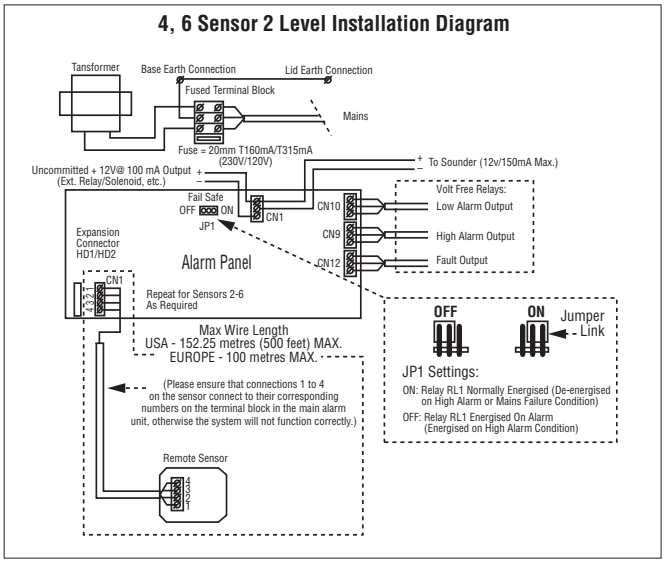

10 - Mounting Instructions

MGD Standard Sensor

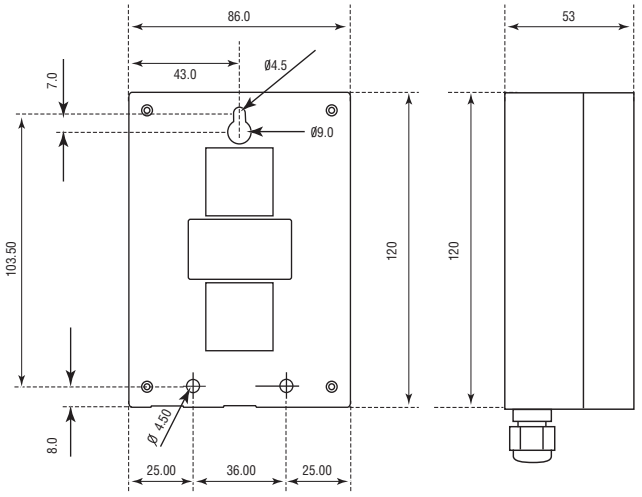

IP66 (with Splashguard)

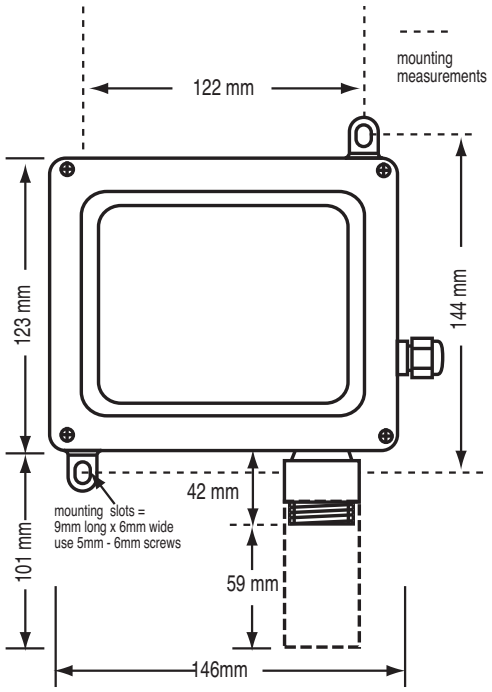

Exd

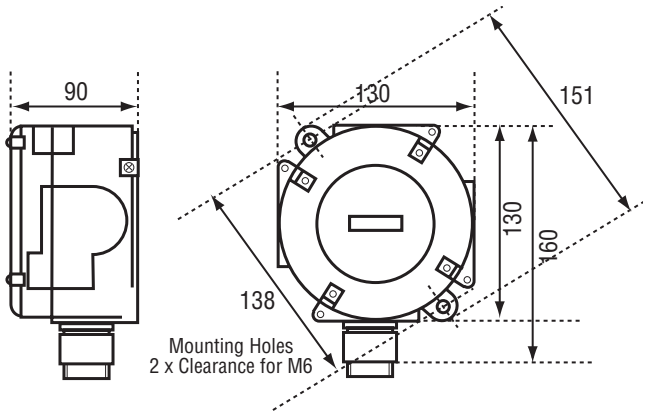

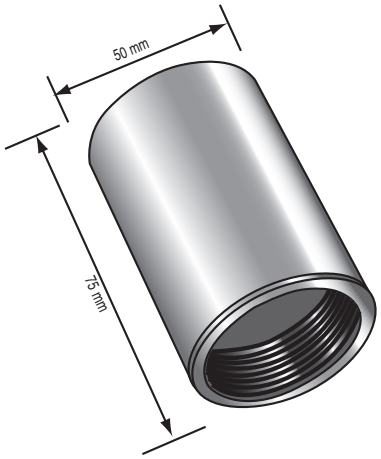

Splashguard

IP66 Remote Head, M42 thread, 3m Cable

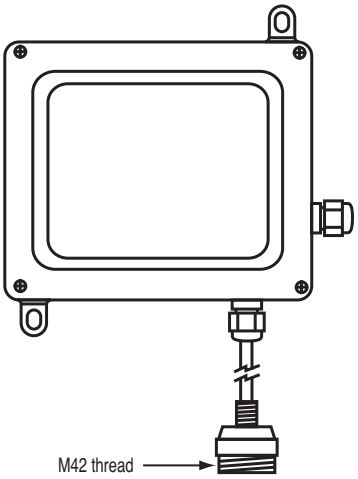

Mounting locations as in IP66

Exd Remote Head, thread varies with model, 5m Cable

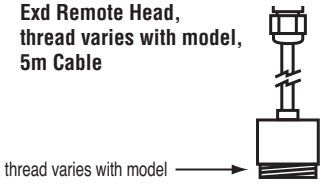

PRV/IP66 Vent Pipe Monitoring 1'' BSP Head 3m Cable

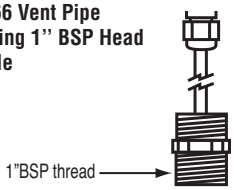

Airflow Duct Mount

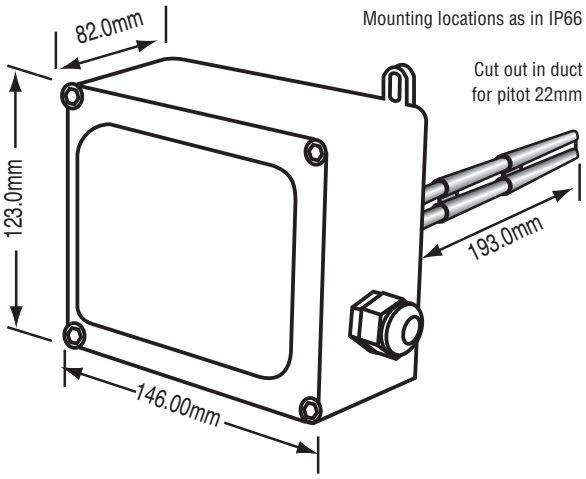

4,6 Sensor Controller Enclosure Relay Expander Box

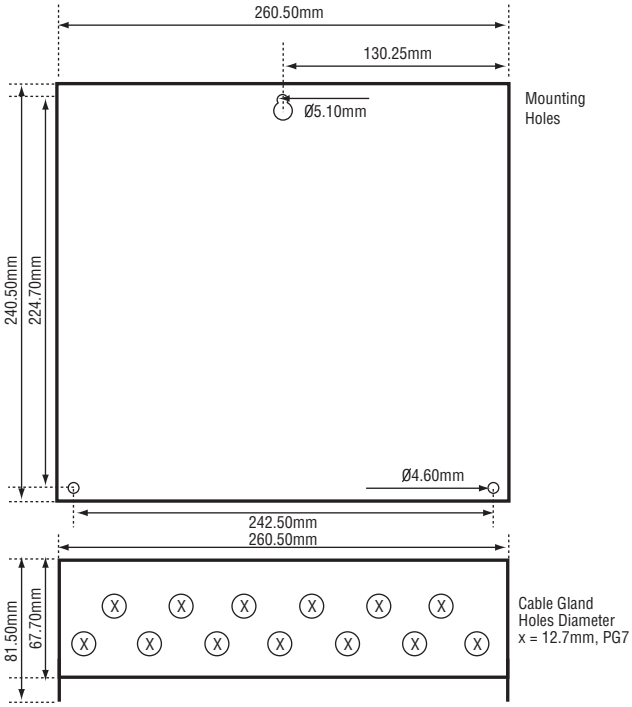

1,2 Sensor Controller Enclosure

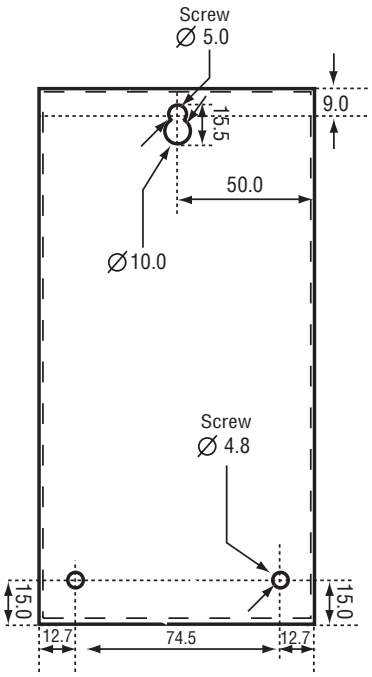

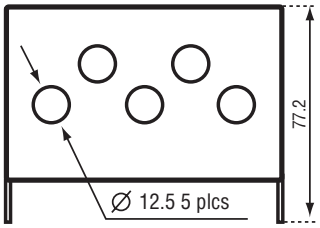

PG 7